Pre-Install Checklist

OptiPure™

Model: OP175/50
Part #: 164-00225

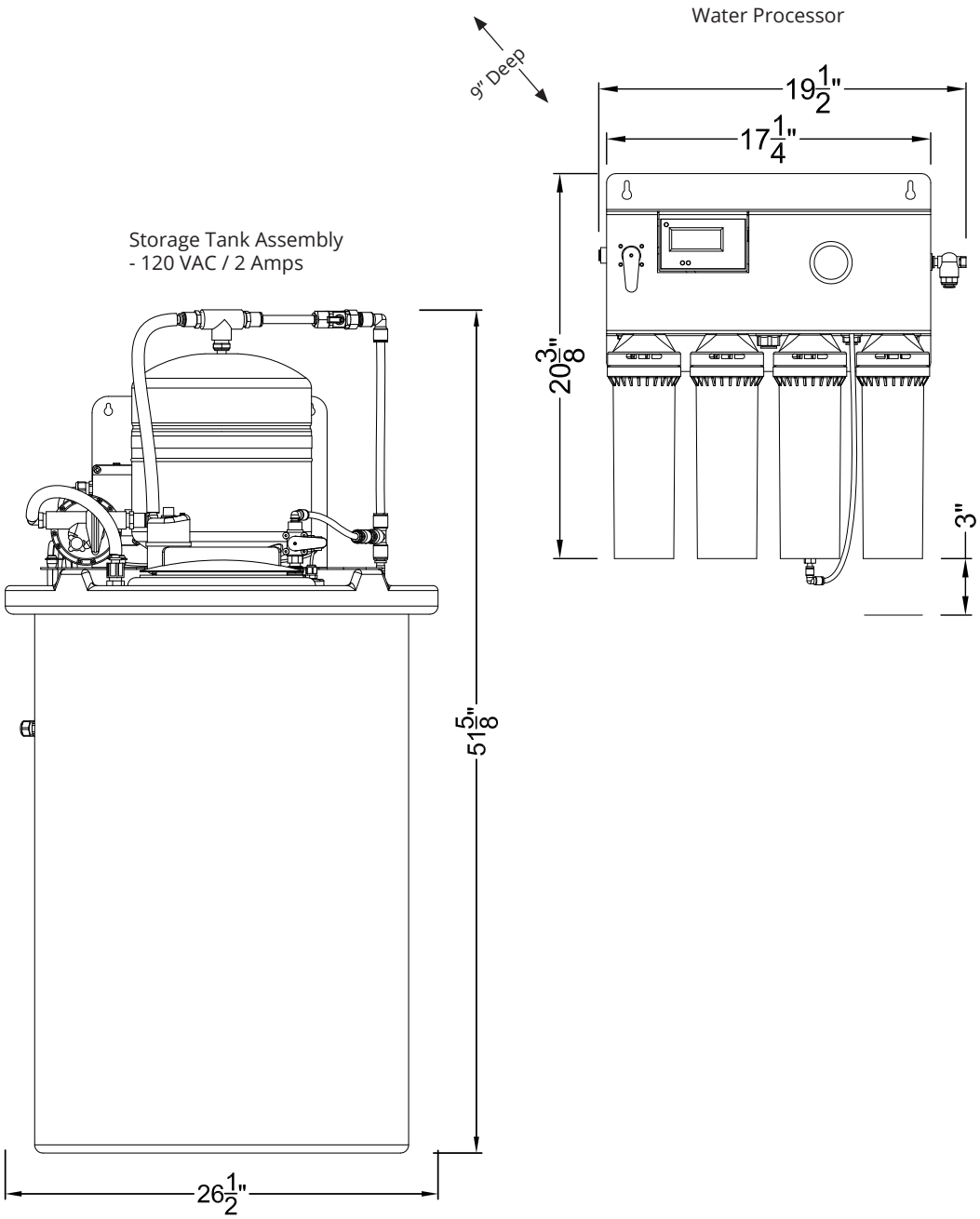

Pre-Installation Requirements

System Placement

- The Water Processor is heavy and must be mounted where it is well-supported, using wall studs, or on a ¾"-thick panel of plywood anchored to the wall studs.
- The Storage Tank Assembly with Repressurization Pump must be located within 5 feet of the water processor. The floor must be smooth, clean and free of sharp objects that could puncture the bottom of the tank.

Feed water connection

- Adequate flow and pressure to the unit is critical. Run a 1/2" cold water line with a full flow ball valve with 1/2" FPT (Female Pipe Thread) connection to the vicinity of the unit. Feed water pressure should be between 50-85 psi.
- Backflow Device – Any backflow devices required by local or state code must be supplied prior to installation.

Electrical

- Repressurization Pump – 120 VAC / 60 Hz / 2 Amps

NOTE: If a BPS200 Boost Pump will to be installed, refer to the Installation/Owners manual for dimensions and installation configurations.

Drain

- A drain with a minimum flow rate of 2 gpm should be located within 6 feet of the unit. Drain line from processor is 1/4" tubing. Comply with local plumbing codes – most require the installation of an approved air gap.

OptiPure, A Division of Aquion,Inc.
101 S. Gary Ave., Suite A
Roselle, IL 60172
p: 972.881.9797 e: info@optipure.net
www.optipurewater.com